FM Kit | Fast Mounting Kit

Steel and rubber

RoHS NBR

NUT
Zinc-plated steel.

PACKING RING
NBR synthetic rubber.

FEATURES
The FM kit (fast mounting kit) has been designed for mounting level indicators series HCX. from the outside when nuts cannot be fitted from the inside of the reservoir.

ASSEMBLY OF THE INDICATOR WITH THE FM KIT (FAST MOUNTING KIT)
- Arrange the holes d1 as reported in the table and make sure that the holes in the plate do not have any burs, especially inside the reservoir.
- Unscrew the nuts from the HCX. indicator and take out the washers supplied with the standard execution, put the packing ring inside and screw the nuts (with or without O-Ring according to the thickness h1).
- Before assembly of the indicator on the reservoir, slightly tighten the nut by hand against the packing ring.

We advise you, then, to deform slightly the threaded end of the screw in order to prevent the nut from falling into the reservoir while disassembling the indicator.
- To disassemble the indicator from the reservoir, just rotate the screw 3/4 of a turn keeping the plastic part of the indicator under tension (pulling).



1.5 < h1 < 4.7
(assembly without O-ring)

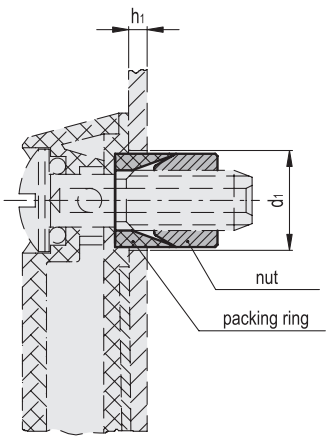

4.7 < h1 < 6.3
(assembly with O-ring)

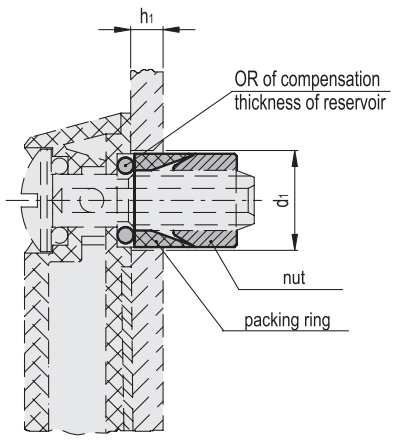

Code	Description	d1 +0.1	Without O-Ring h1 min	Without O-Ring h1 max	With O-Ring h1 min	With O-Ring h1 max	Maximum tightening torque [Nm]
31801	FM-HCX.76-M10-KIT	16	1.5	4.7	4.7	6.3	7
31811	FM-HCX.127-254-M12-KIT	17.5	1.5	4.7	4.7	6.3	7

Models all rights reserved in accordance with the law. Always mention the source when reproducing our drawings and photos.